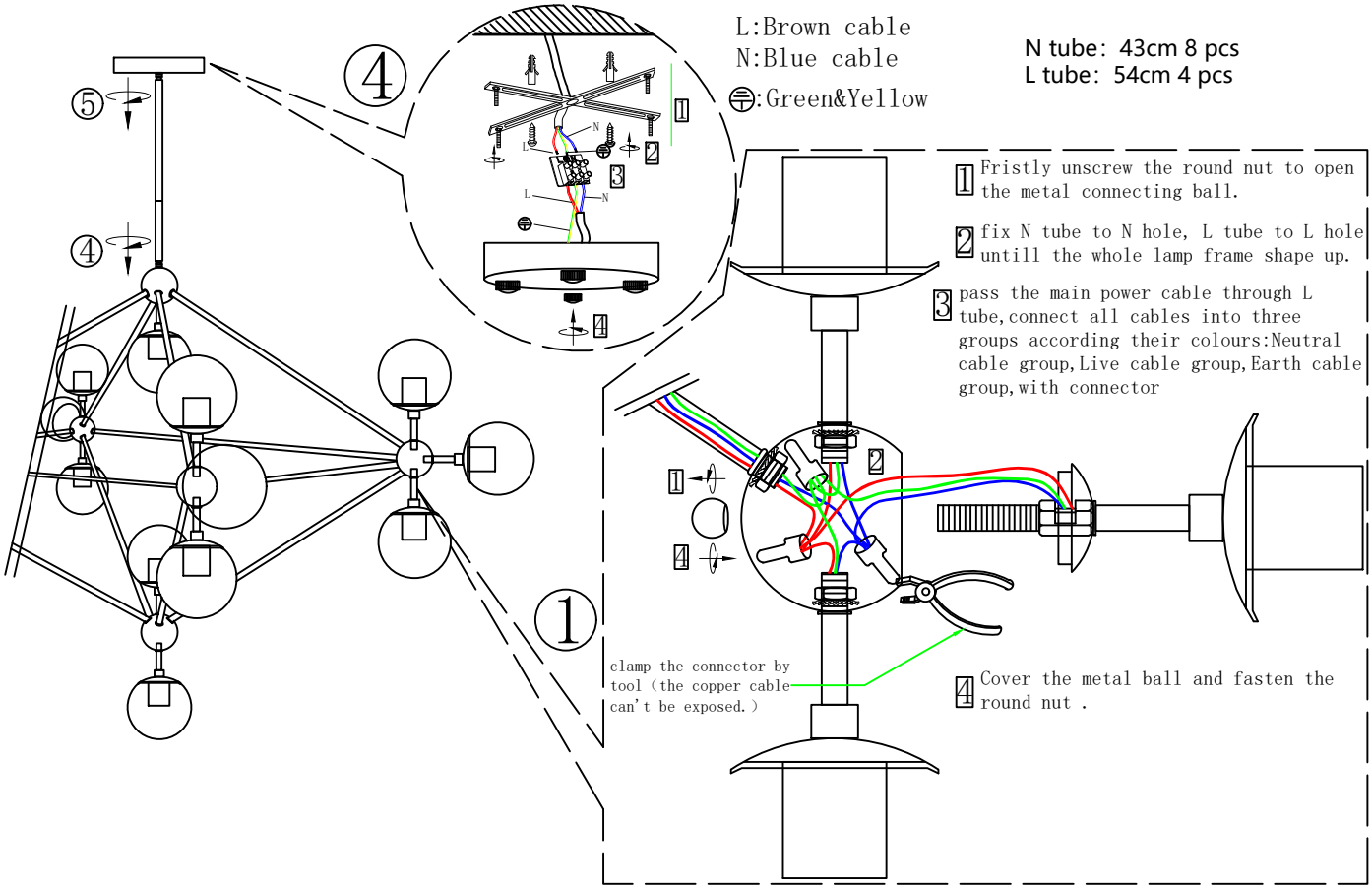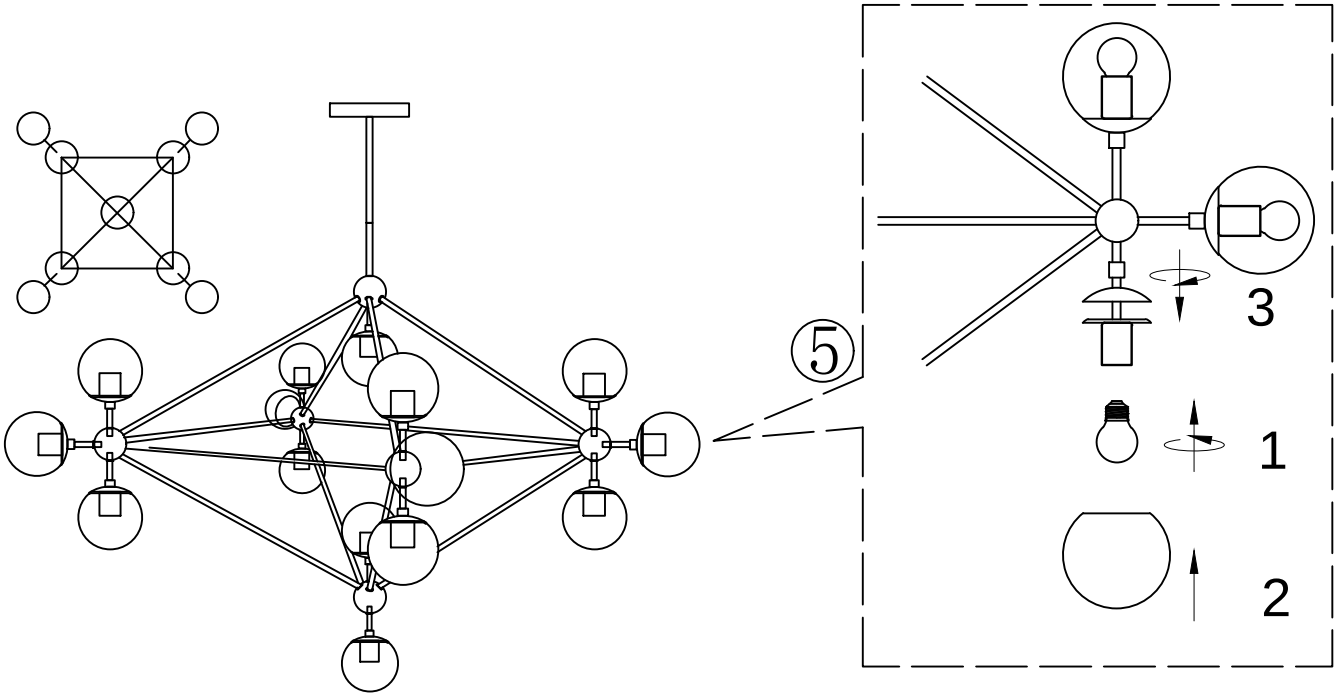# INSTALLATION DESCRIPTION